Fisher Engineering
50 Gordon Drive, Rockland, Maine 04841-2139 • www.fisherplows.com

50810
92000
December 1, 2021
Lit. No. 49598, Rev. 11

Blade and Off-Truck Kit

XLS™ Snowplow

Parts List

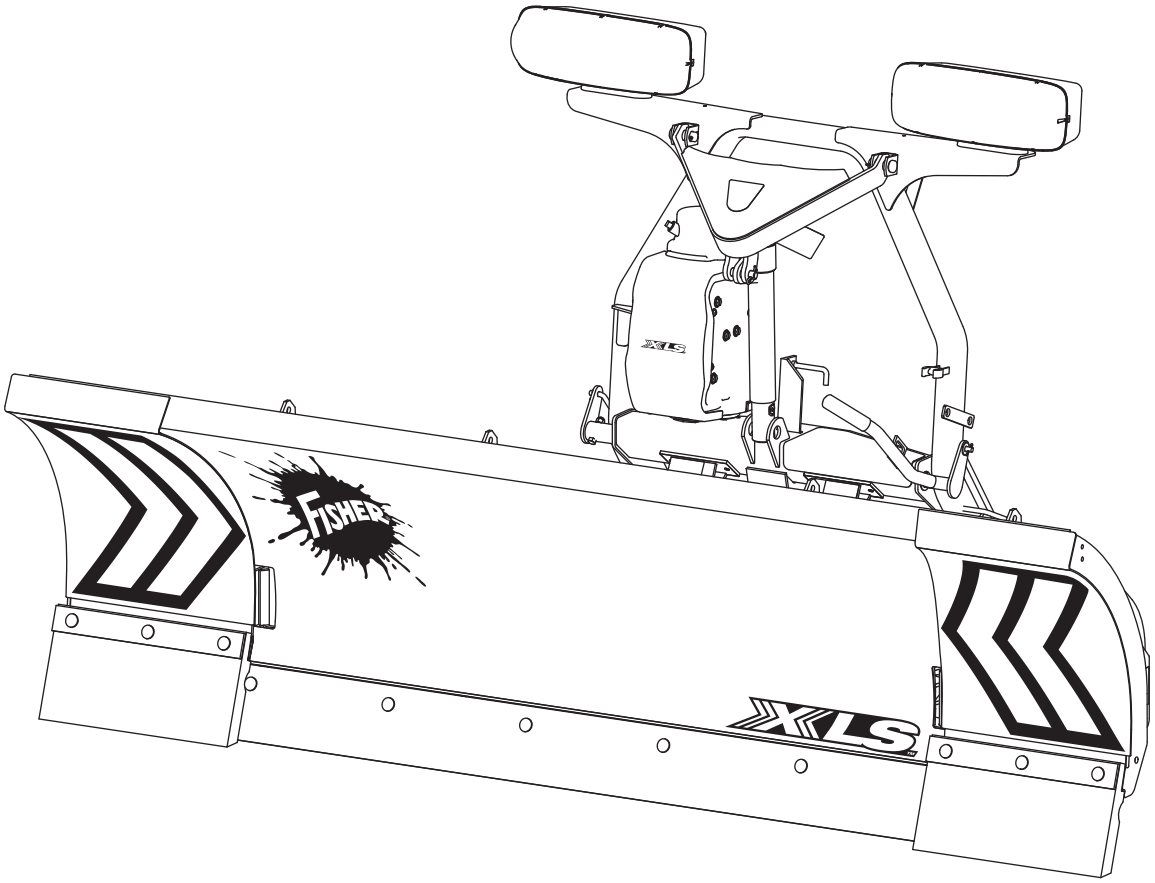

XLS™ BLADE 4
XLS OFF-TRUCK KITS 6
Headgear and A-Frame 6
Hydraulic Unit 8
Hydraulic Unit Cover Assembly 10
Lift and Angle Rams 11
Hoses and Fittings 11
Electrical Components 12
Vehicle-Side Wiring Diagram – 3-Port, 2-Plug Systems 13
Headlamp Kit 14

Blade Components

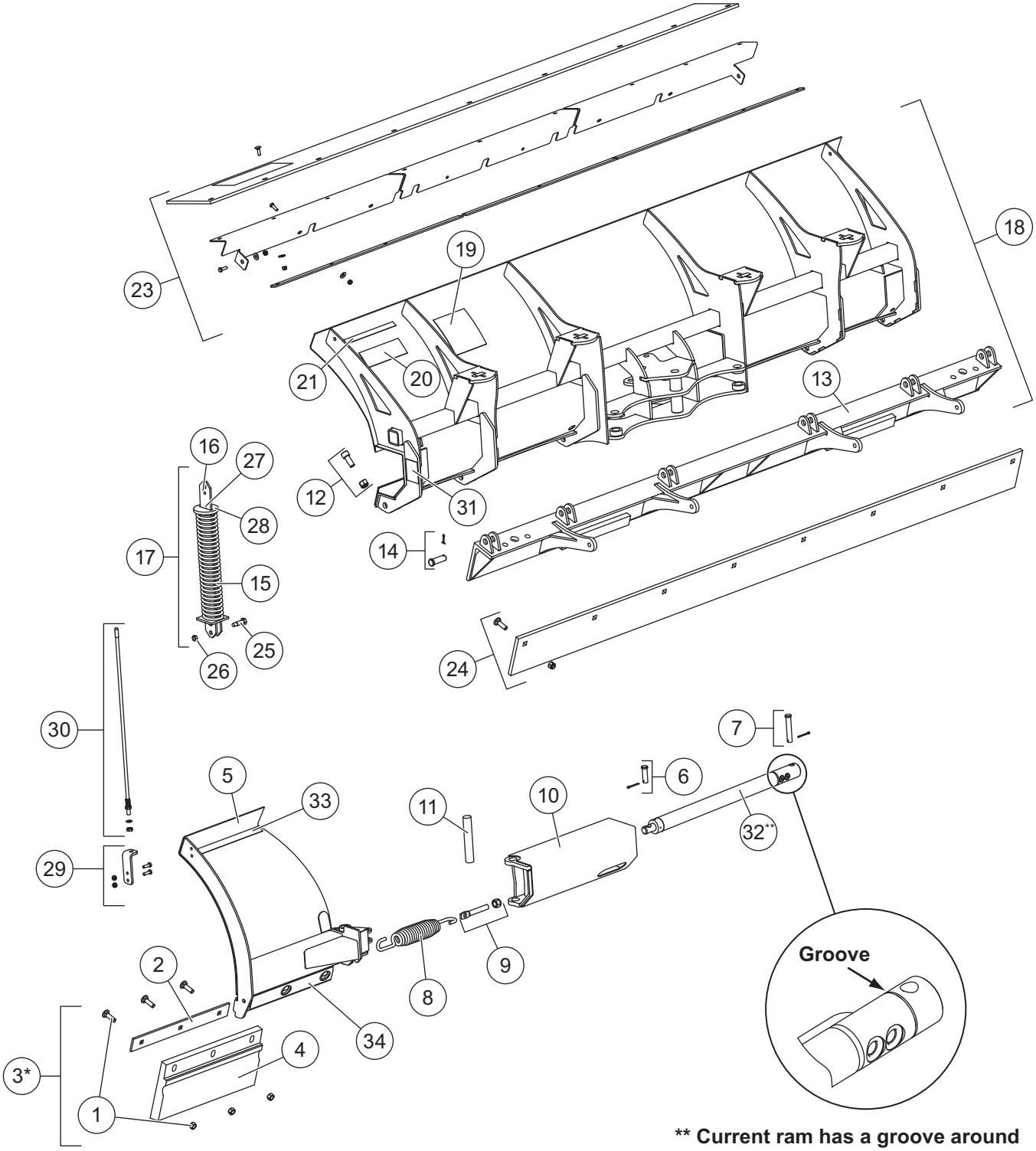

** Current ram has a groove around the base near the pin hole. Early ram does not have a groove.

* Does not include retainer bar (item 2).

50810 XLS™ Blade					
Item	**Part**	**Description**	**Item**	**Part**	**Description**
1	50642	Bolt Kit, Urethane Edge	20	26211	Label – Logo, STORM GUARD™
2	50643	Retainer Bar	21	50604	Label – Logo, XLS, 8'–10'
3	50626	Urethane Edge Assembly Kit (does not include retainer bar)	23	50628-1	Rubber Deflector Kit, XLS
			24	50678	Cutting Edge Kit
4	50645	Urethane Edge	25	91000	1/2 x 1-5/8 Hex Shoulder Bolt G5
5	50647	DS Blade Wing, XLS	26	90353	7/16-14 Hex Locknut GB
ns	50648	PS Blade Wing, XLS	27	20181	1/4 x 1-1/4 Pin
6	50651	5/8 x 2 Pin Kit	28	20191	Removable Spring Disk
7	50653	5/8 x 3-1/2 Pin Kit	29	50646	Kit, Blade Guide Bracket
8	50654	Wing Spring	30	27195	Flexible Blade Guide Kit 26"
9	50655	Eyebolt Kit	31	29593	Label – Warning, Multiple Pinch Points
10	50656	DS Blade Slide Box, XLS	32**	B60347	Hydraulic Cylinder, Slide Box (early ram – see callout on diagram)
ns	50657	PS Blade Slide Box, XLS			
11	50660	Wing Pin		43803	Ram Assembly, 1-1/2 x 13-15/16 DA (current ram – see callout on diagram)
12	50661	Stop Bolt Kit			
13	50662	Base Angle	ns	B60373	Combo Seal Kit, Cylinder B60347
14	84844	3/4 x 2-3/16 Machine Pin w/Cotter	ns	43794	Seal Kit, Ram Assembly 43803
15	50663	Trip Spring	33	50639	Wear Strip – Wing Top
16	50664	Spring Bar	34	50638	Wear Strip – Wing Bottom
17	50665	Spring Assembly Kit	ns	29639	Label – Logo, XLS Wings
18	50666	XLS Blade	ns	20238	Label – Logo, FISHER® 13-1/4 x 14-1/2
19	59900	Label – Warning/Caution, Snowplows	ns	29535	Label – Logo, XLS
Item 17		**50665 Spring Assembly Kit**			
15	50663	Trip Spring	26	90353	7/16-14 Hex Locknut GB
16	50664	Spring Bar	27	20181	1/4 x 1-1/4 Pin
25	91000	1/2 x 1-5/8 Hex Shoulder Bolt G5	28	20191	Removable Spring Disk
ns = not shown			G = Grade		

Headgear and A-Frame Components

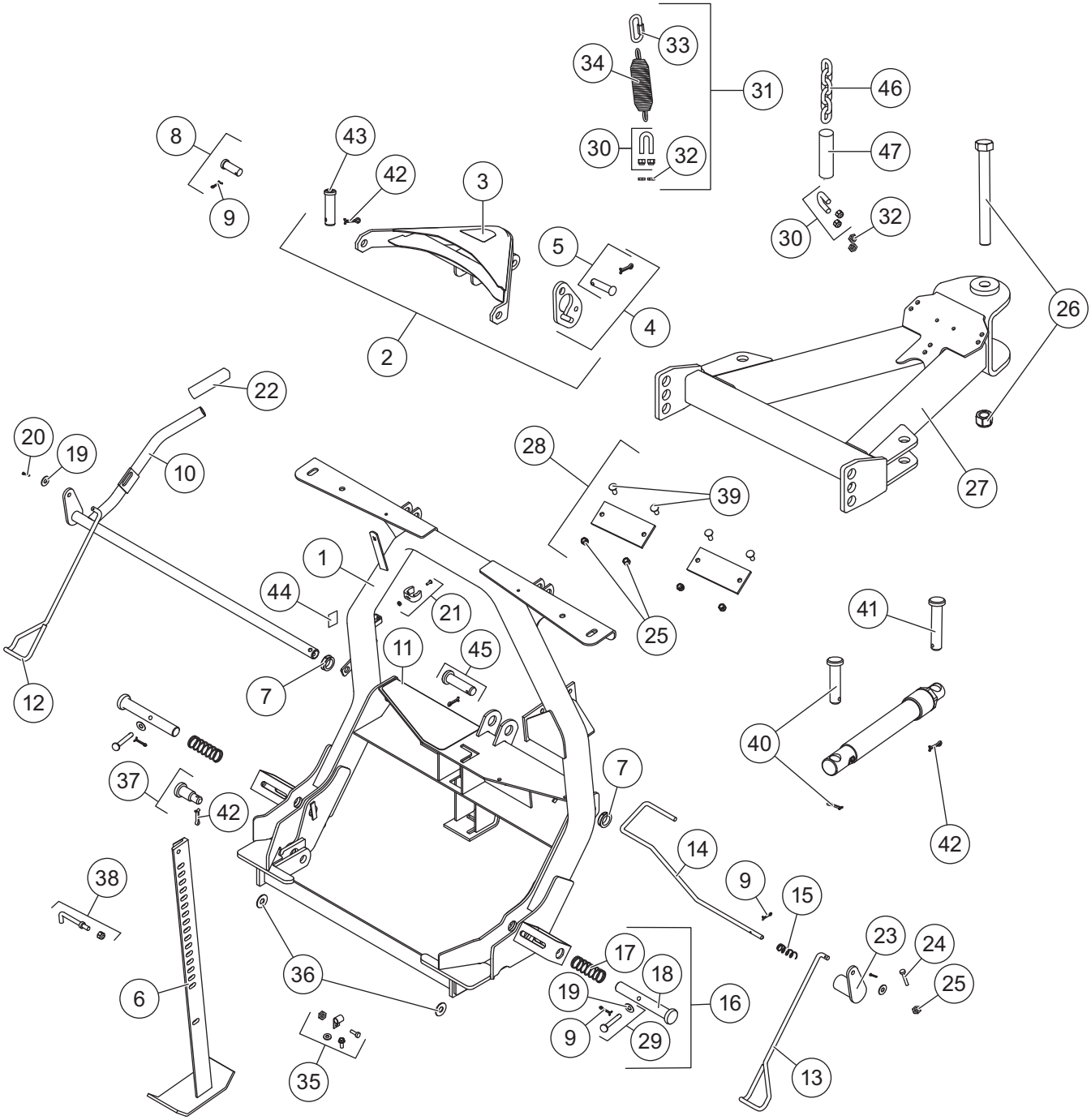

XLS™ Headgear and A-Frame Components							
Item	**Part**	**Qty**	**Description**	**Item**	**Part**	**Qty**	**Description**
1	44558-2	1	Headgear	25	91333	1	3/8-16 Hex Locknut GB
2	28350-2	1	Lift Arm Service Kit – Yellow	26	50668	1	Pivot Bolt Kit
3	26777	1	Label – Nameplate, Minute Mount® 2	27	50669	1	A-Frame Kit
4	28991	1	Stop Link Kit	28	50632	1	Stacking Stops Kit
5	29037	1	5/8 x 2-5/8 Clevis Pin w/Cotter	29	26219	2	3/8 x 3-1/4 Clevis Pin Kit
6	27462	1	Jack	30	A6148K	3	U-Bolt Assembly Packet
7	27163K	1	Bushing Kit (pkg of 2)	31	49521	1	Spring/U-Bolt/Link Kit
8	4289K	2	3/4 x 1-7/8 Machine Pin Packet	32	91413	2	3/8-16 Hex Nut G5
9	90658	5	5/32 x 1-1/4 Cotter Pin	33	68340	1	Quick Link
10	27468	1	Handle, Link Arm Assembly	34	27074	1	Spring
11	27451	1	Label – Attach/Detach, MM2 Headgear	35	27172K	1	Clamp Loop Kit
12	27166K	1	Wire Cam Kit – DS	36	91192	2	1-3/4 Round Flat Washer
13	27167K	1	Wire Cam Kit – PS	37	27177K	2	Step Pin Kit
14	27478	1	Jack Lock	38	27164K	1	Handle Kit
15	27461	1	3/4 OD x 3-1/2 Compression Spring	39	90201	4	3/8-16 x 1 Carriage Bolt G5
16	27168K	2	Connecting Pin Kit	40	7903K	6	1 x 4-1/16 Anchor Pin Packet w/Cotter
17	821	2	1" ID x 3-1/2 Compression Spring	41	22260	2	1 x 4-3/4 Clevis Pin
18	26833	2	1 x 6-15/16 Pin	42	90601	2	1/4 x 1-1/2 Cotter Pin
19	90315	4	3/8 Flat Washer Type A Wide	43	95720	2	1 x 3-5/16 Clevis Pin HT
20	91902	1	1/8 x 1 Cotter Pin	44	69689	1	Label – Logo, SECURITY GUARD™
21	27162K-1	1	Stop Clip Kit	45	43603	1	1 x 3-3/4 Clevis Pin Kit
22	27535	1	Handle Cover Kit	46	26999-1	1	5/16 Grade 43 Chain Bag
23	27465	1	Link Arm	47	51110	2	Shrink Tube, 1" ID
24	90043	1	3/8-16 x 2 Hex Cap Screw G5				
Item 2			**28350-2 Lift Arm Service Kit – Yellow**				
3	26777	1	Label – Nameplate, Minute Mount 2	42	90601	1	1/4 x 1-1/2 Cotter Pin
4	28991	1	Stop Link Kit	43	95720	1	1 x 3-5/16 Clevis Pin HT
Item 4			**28991 Stop Link Kit**				
		1	Stop Link	5	29037	1	5/8 x 2-5/8 Clevis Pin w/Cotter
Item 16			**27168K Connecting Pin Kit**				
17	821	1	Compression Spring, 1" ID x 3-1/2	29	26219	1	3/8 x 3-1/4 Clevis Pin Kit
18	26833	1	1 x 6-15/16 Pin				
Item 29			**26219 3/8 x 3-1/4 Clevis Pin Kit**				
		1	3/8 x 3-1/4 Clevis Pin	19	90315	1	3/8 Flat Washer Type A Wide
9	90658	4	5/32 x 1-1/4 Cotter Pin				
Item 31			**49521 Spring/U-Bolt/Link Kit**				
30	A6148K	3	U-Bolt Assembly Packet	33	68340	1	Quick Link
32	91413	2	3/8-16 Hex Nut G5	34	27074	1	Spring
			HT = Heat Treated				G = Grade

Hydraulic Unit Components

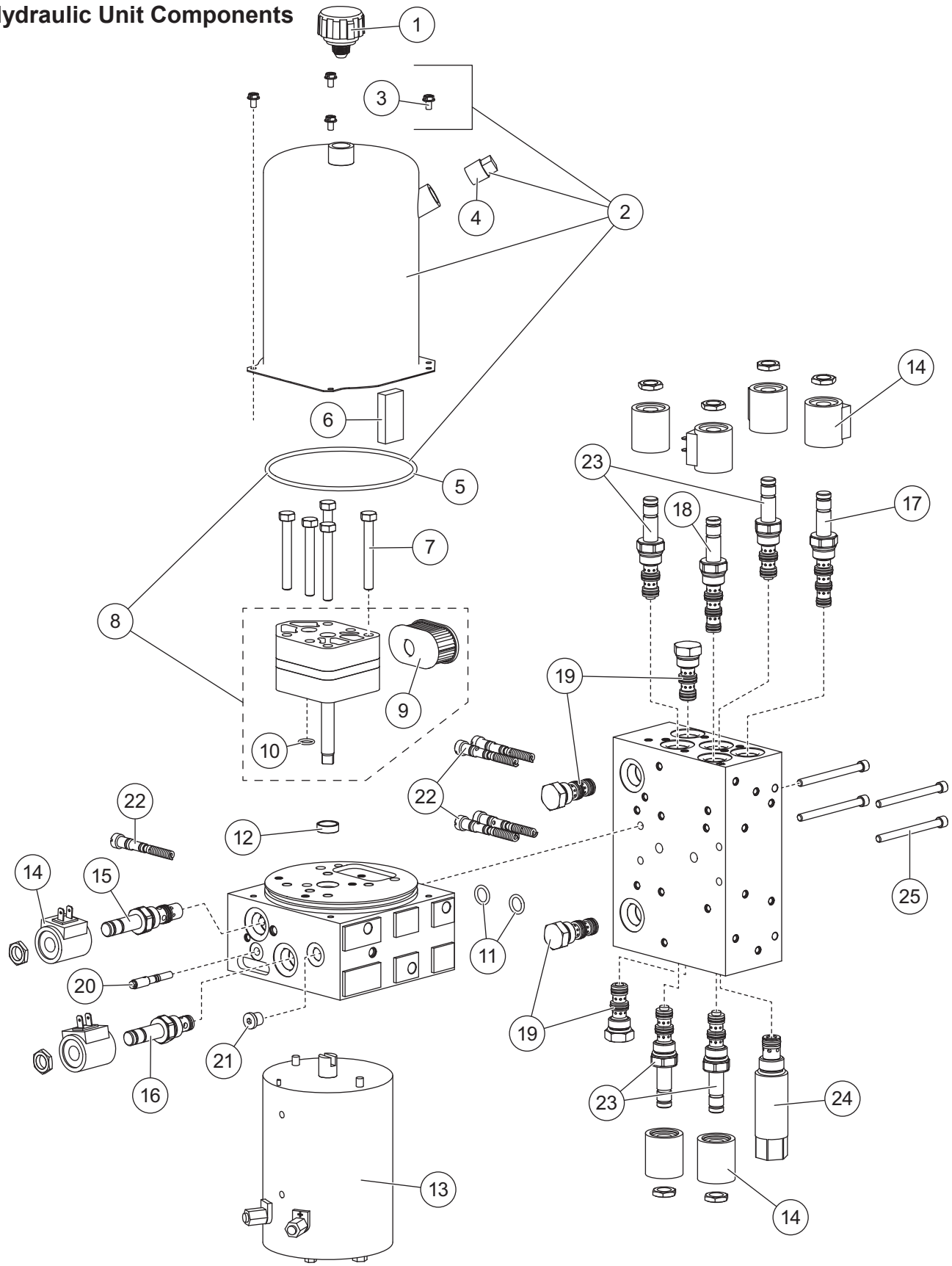

49451 Hydraulic Unit XLS™							
Item	**Part**	**Qty**	**Description**	**Item**	**Part**	**Qty**	**Description**
1	21727-2	1	Breather Pressure Control	17	49453	1	Valve, SV08-45 w/Nut
2	44327-3	1	Reservoir Kit	18	49457	1	Valve, SV08-41 w/Nut
3	66607	4	#10-24 x 5/16 Machine Screw	19	49459	4	Valve, PC08-30 w/Nut
4	92079	1	Plug, Square 3/8 NPTF	20	56662	1	Quill Assembly 5/16-24 Thread
5	66519	1	O-Ring 2-250		48517	1	Quill Assembly 1/2-20 Thread
6	73897	1	Magnet	21	44344	1	Plug, Hex Socket –4 M ORB
7	90080	5	5/16-18 x 2-1/2 Hex Cap Screw G5	22	7629K-4	2-1/2	Relief Valve Kit (2 sets)
8	44329-2	1	Pump Kit	23	7636K-1	4	Cartridge 30 w/Jam Nut
9	26781-4	1	Suction Filter	24	49463	1	Crossover Relief Valve, 4000 psi
10	56274	1	O-Ring -013	25	29081	4	1/4-20 x 3 Socket Cap Screw
11	55587	2	O-Ring -112	ns	29099	2	1/4-20 x 1/4 Hex Washer-Head Thread-Rolling Screw
12	66515	1	Pump Shaft Seal				
13	21500K-1	1	Motor Assembly, 4-1/2	ns	44326	1	1/4-20 x 1/2 6-Lobe Round Washer-Head Screw (pkg of 5)
14	7639K-2	8	Coil w/ Spade Terminals				
15	44331	1	Valve, SVCV08-20 w/Nut	ns	44355	2	1/4-20 x 5/8 Hex Washer-Head Thread-Rolling Screw
16	7634K-2	1	Valve, SV08-2004 w/Jam Nut				
O-Ring Service Kits							
–	7632K-5†	–	Back-Up/O-Ring Kit	–	49259-2	–	Seal Kit, Valves SV08-30, 31, 33, 41, 40, 43, 45, SVCV08-20 & PC08-30
–	49258-2	–	Seal Kit, Valves SV08-2004, CV08-20, SF08-2015	–	49464	–	Seal Kit, Crossover Relief Valve
ns = not shown				M = Male			G = Grade

† Does not contain O-rings for cartridge valves.

Hydraulic Unit Cover Assembly

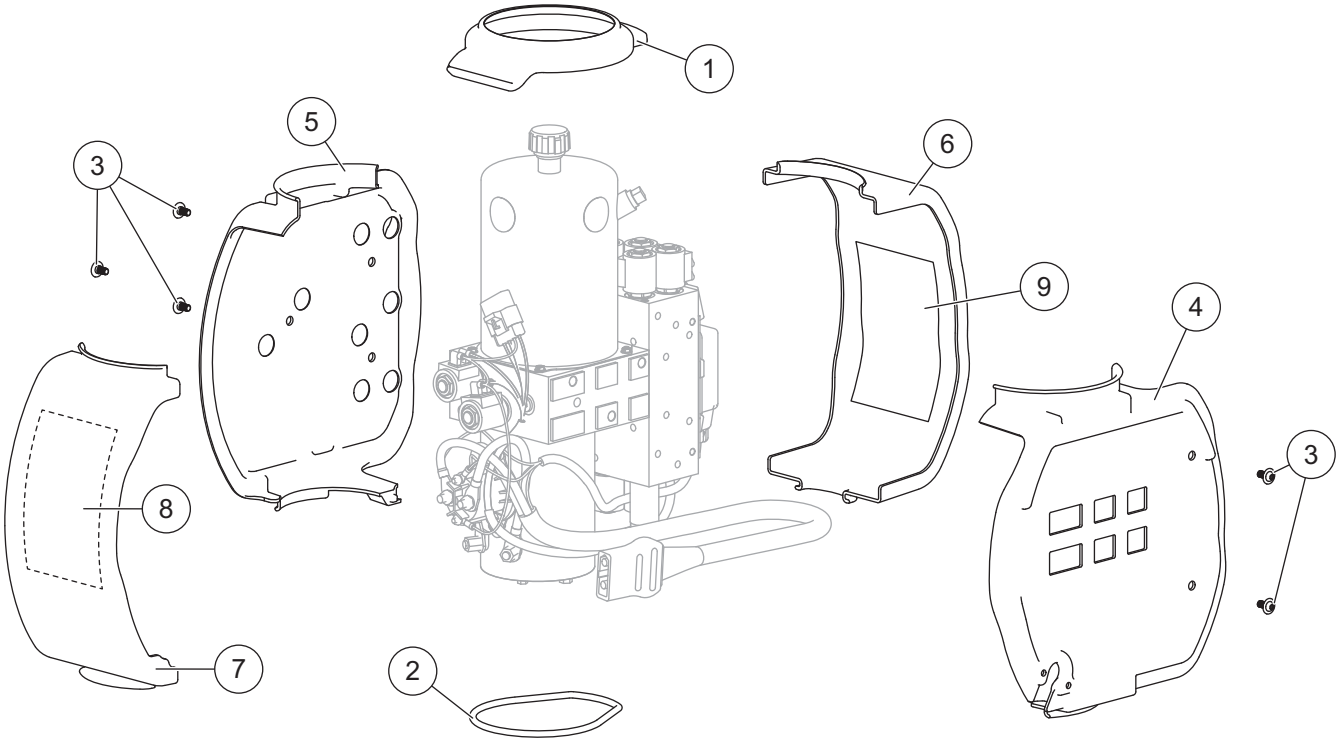

49454 Hydraulic Unit Cover Assembly							
Item	**Part**	**Qty**	**Description**	**Item**	**Part**	**Qty**	**Description**
1	44352	1	Top Retainer Ring	6	44303	1	Cover Side 3
2	44366	1	Bottom Retainer Ring	7	44304	1	Cover Side 4
3	44326	5	1/4-20 x 1/2 6-Lobe Round Washer-Head Screw (pkg of 5)	8	44904	1	Label − Information
				9	44906	1	Label − Information
4		1	Cover Side 1	ns	49444	1	Label − Logo, XLS™ Hydraulic Unit
5		1	Cover Side 2	ns	61536	1	Cable Tie, 14"
ns = not shown							

Lift and Angle Ram Components

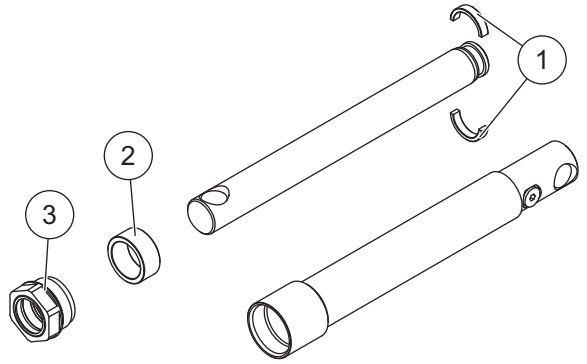

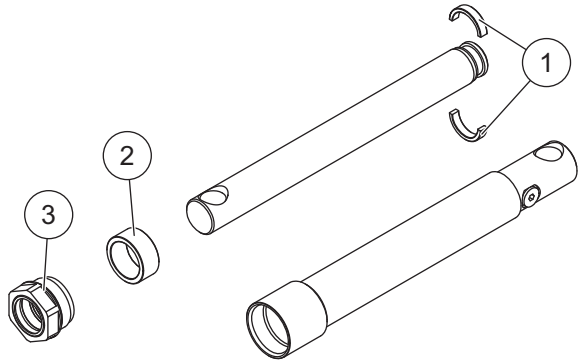

56600K Lift Ram Assembly 1-1/2 x 10			
Item	**Part**	**Qty**	**Description**
1	20118K	1	Split Bearing 1-1/2
2	56537	1	Spacer
3	48985	1	Gland Nut Assembly

49461 Angle Ram Assembly 1-1/2 x 10			
Item	**Part**	**Qty**	**Description**
1	20118K	1	Split Bearing 1-1/2
2	56537	1	Spacer
3	48985	1	Gland Nut Assembly

Hoses and Fittings

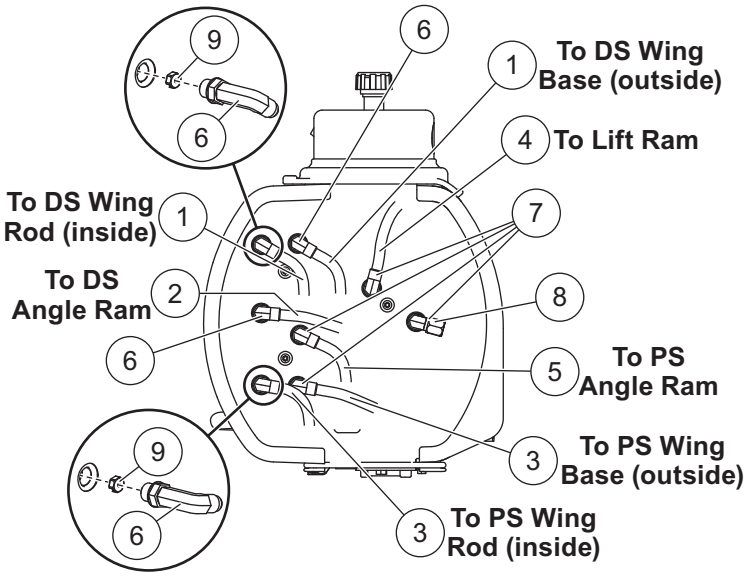

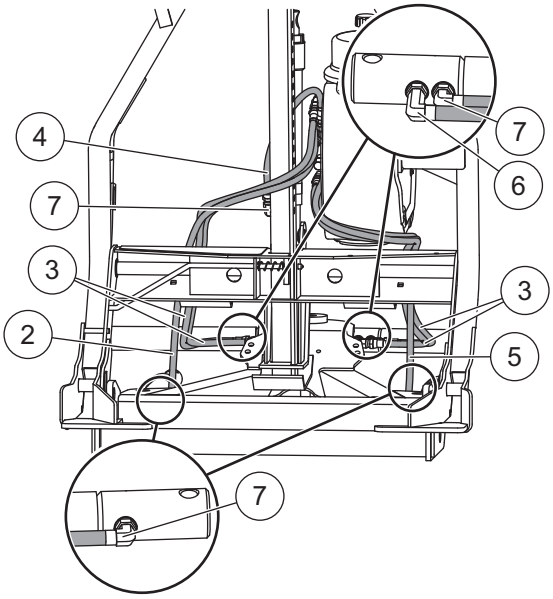

Hoses and Fittings							
Item	**Part**	**Qty**	**Description**	**Item**	**Part**	**Qty**	**Description**
1	44868	2	Hose, 3/8 x 60 w/F JIC Ends	7	77929	7	Elbow, 90° –6 M JIC/–6 M ORB w/Screen
2	44316	1	Hose, 3/8 x 45 w/F JIC Ends				
3	44867	2	Hose, 3/8 x 57 w/F JIC Ends	8	44345	1	Drain Cap, –6 F JIC
4	56754	1	Hose, 1/4 x 18 w/F JIC Ends	9	49465	2	Orifice Kit
5	44348	1	Hose, 3/8 x 42 w/F JIC Ends	ns	56823	6	Hose Wrap, Polyethylene
6	44361	6	Elbow, Extra Long 90° –6 M JIC/–6 M ORB	ns	98043	3	3/8-16 x 1 Button Cap Screw
				ns	B63263	4	Label – Warning, Hose Install
F = Female			ns = not shown				M = Male

Electrical Components

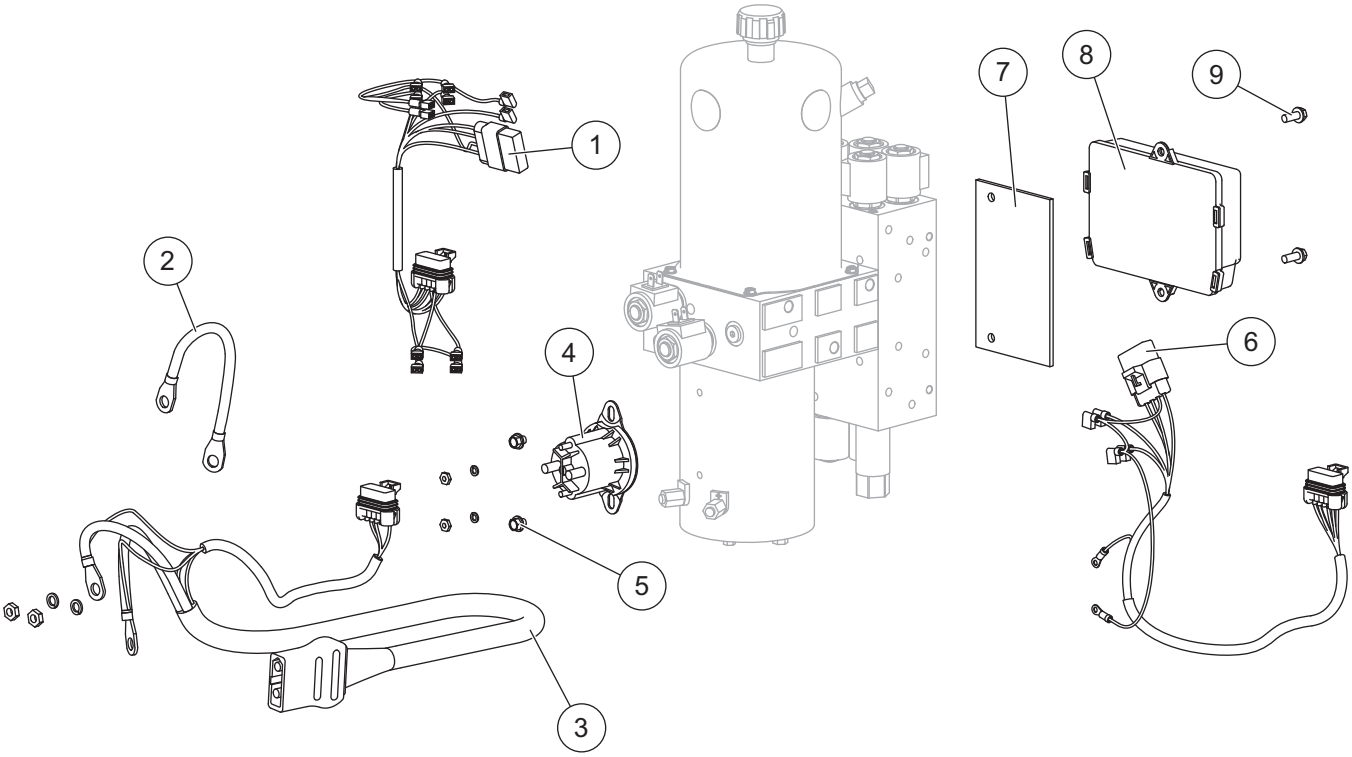

Plow-Side Electrical Components							
Item	**Part**	**Qty**	**Description**	**Item**	**Part**	**Qty**	**Description**
1	29471	1	Plow Control Harness, 6-Solenoid	8	44354-3	1	Plow Module
2	29071	1	Cable Assembly 8"	9	44355	2	1/4-20 x 5/8 Hex Washer-Head Thread-Rolling Screw
3	42015	1	Snowplow Battery Cable				
4	42901	1	Motor Relay Kit FLEET FLEX System	ns	8284K	1	Cable Boot
5	29099	2	1/4-20 x 1/4 Hex Washer-Head Thread-Rolling Screw	ns	8329K	2	Dielectric Grease (pkg of 2)
				ns		4	Fuse, 4A Mini Automotive-Style (for items 1 and 6)
6	29461	1	Plow Control Harness, 2-Solenoid				
7	44308	1	Spacer Module				
Vehicle-Side Electrical Components							
‡	42014	1	Vehicle Battery Cable	ns	61548K	1	Plug Cover
‡	28587	1	Vehicle Control Harness				
ns = not shown							

‡ For diagram see Vehicle-Side Harness Diagram – 3-Port, 2-Plug System.

Vehicle-Side Harness Diagram
3-Port, 2-Plug System

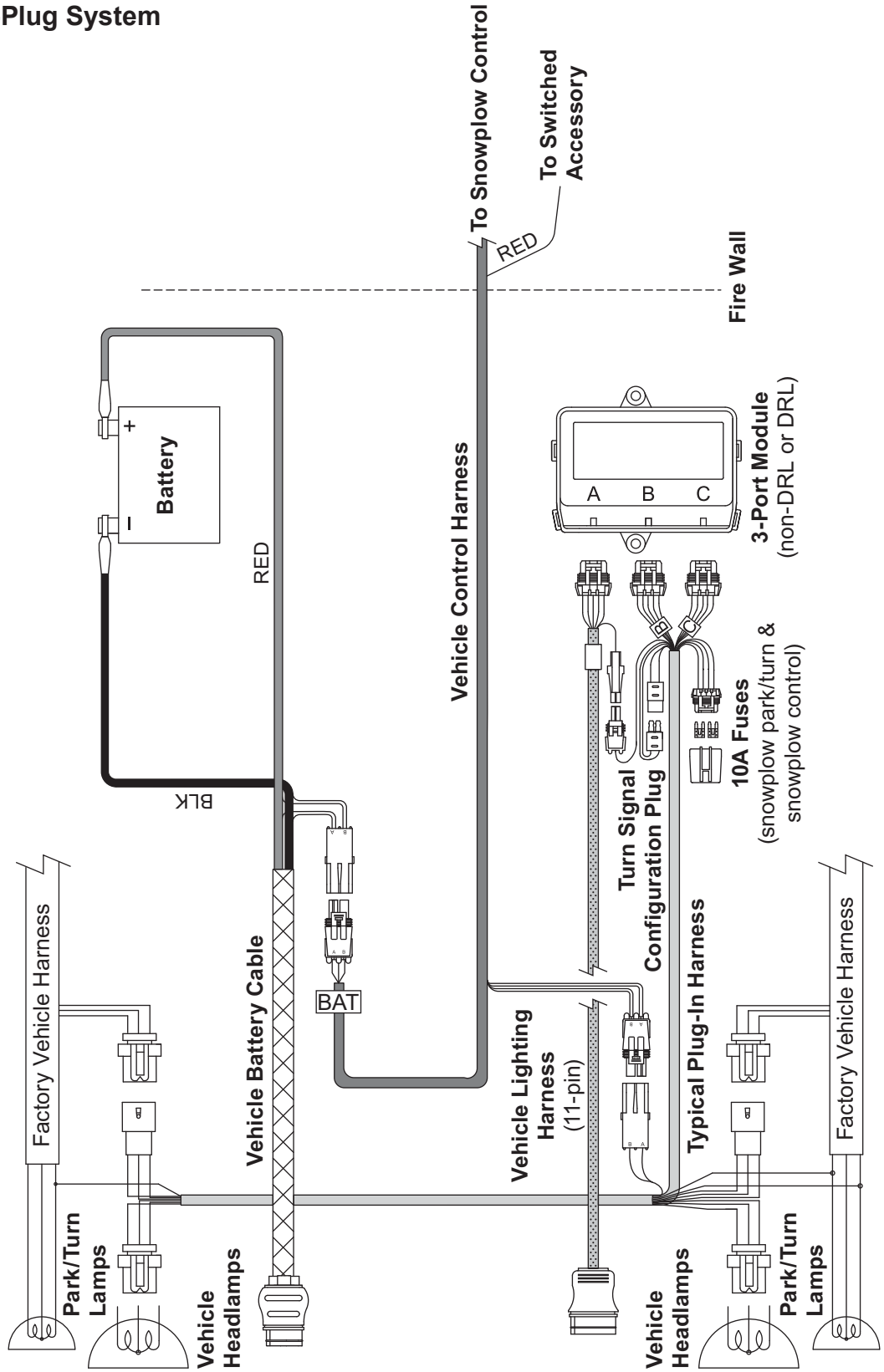

Headlamp Kit

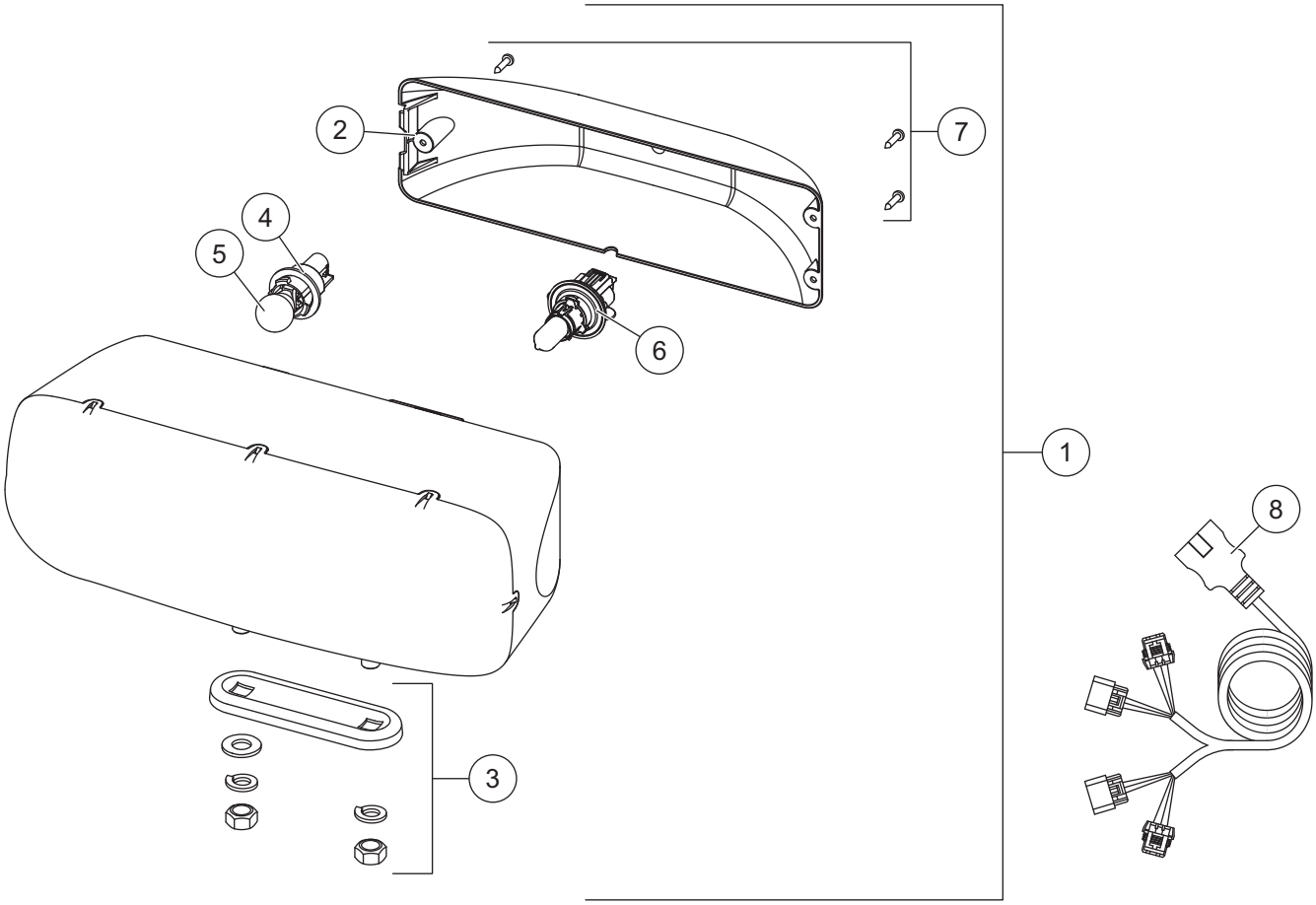

28800-1 Headlamp Kit (pair)							
Item	Part	Qty	Description	Item	Part	Qty	Description
1	28802-1	1	Headlamp Service Kit – PS	5		2	Park/Turn Bulb (trade no. 4157NAK)
ns	28801-1	1	Headlamp Service Kit – DS	6	28806	2	Headlamp Bulb Service Kit H13
2	28803-1	2	Rear Cover Kit (fits 2- or 3-screw)	7	28808-1	2	Cover Screws Service Kit (pkg of 3)
3	28804	2	Mounting Hardware Kit	8	28213K	1	Harness Service Kit
4	28805	2	Park/Turn Socket Service Kit				
ns = not shown							

Fisher Engineering
50 Gordon Drive
Rockland, ME 04841-2139
www.fisherplows.com

A DIVISION OF FISHER, LLC

Copyright © 2021 Douglas Dynamics, LLC. All rights reserved. This material may not be reproduced or copied, in whole or in part, in any printed, mechanical, electronic, film, or other distribution and storage media, without the written consent of Fisher Engineering. Authorization to photocopy items for internal or personal use by Fisher Engineering outlets or snowplow owner is granted.

Fisher Engineering reserves the right under its product improvement policy to change construction or design details and furnish equipment when so altered without reference to illustrations or specifications used. Fisher Engineering or the vehicle manufacturer may require or recommend optional equipment for snow removal. Do not exceed vehicle ratings with a snowplow. Fisher Engineering offers a limited warranty for all snowplows and accessories. See separately printed page for this important information. The following are registered (®) or unregistered (™) trademarks of Douglas Dynamics, LLC: FISHER®, Minute Mount® 2, SECURITY GUARD™, STORM GUARD™, XLS™.

Printed in U.S.A.